This drawing contains PROPRIETATY information and is the property of ZeroErr. This drawing may not be copied or used without prior written approval of ZeroErr.

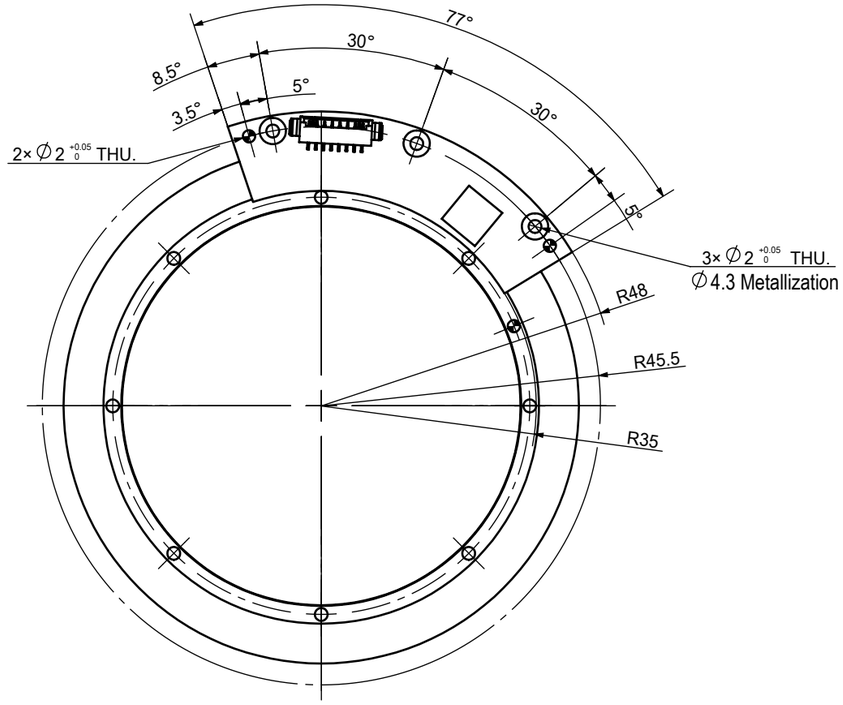

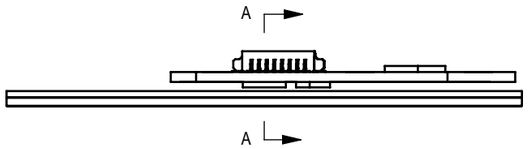

A-A

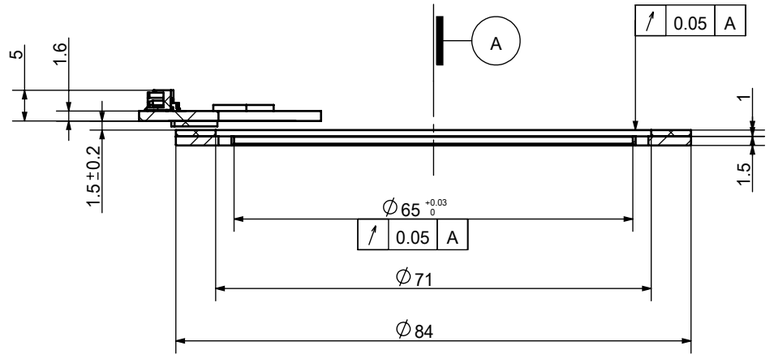

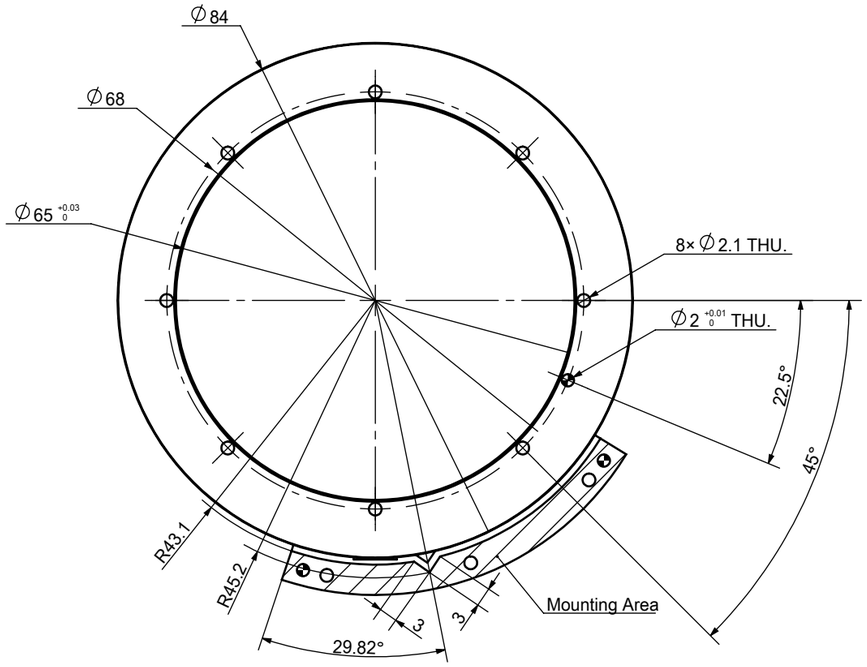

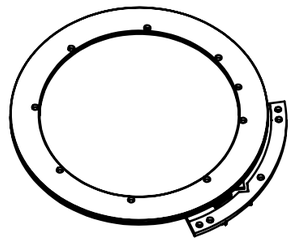

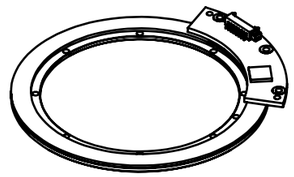

UNLESS OTHERWISE SPECIFIED: DIMENSIONS APPLY BEFORE COATINGS REMOVE ALL SHARP BURRS AND BREAK ALL SHARP EDGES		MODEL		DRAWG NO.		QTY.	SCALE	MATERIAL	SURFACE TREATMENT
UNSPECIFIED DIMENSIONAL TOLERANCE		eCoder65		ZE-65-000-0					
> 0.5-3	±0.1		NAME	DATE	SIZE	VERSION		1:1	
> 3-6	±0.1	DRAWG			A3		MATERIAL CODE		
> 6-30	±0.2								
> 30-120	±0.3	CHECK			PERSPECTIVE		ZeroErr Control Co., Ltd		
> 120-400	±0.5								
ANGULAR TOLERANCE:±1°		APPROV			THIRD ANGLE				

MILLIMETERS